ST230V

COMPACT TRACK LOADER

10,318 LBS OPERATING WEIGHT
73 HP NET ENGINE POWER
7,368 LBS TIPPING LOAD

SANY



AGILE FORCE UNMATCHED

EASY TO **OWN, OPERATE, & SERVICE**

INDUSTRY'S STRONGEST STANDARD WARRANTY

3-YEAR* 3,000 HOURS

*WARRANTY APPLIES TO 2026 TELEHANDLER, GRADER, ROLLER, TRACK LOADER AND CRANE MODELS ONLY.

MADE FOR AMERICAN OPERATORS

The ST230V shows up to the jobsite ready to work, not complicate the day. Auto two-speed travel and wide Z-pattern tracks make it easy to operate across soft ground, hard surfaces, and tight spaces. High-flow capability means one machine can handle multiple tasks without switching iron, while the factory hydraulic quick coupler keeps attachment changes fast and simple. Service is straightforward, with accessible maintenance points and a reversing fan that helps keep debris out of the cooling system. Built with proven components and backed by a strong standard warranty, the ST230V keeps ownership predictable, downtime low, and productivity high—earning its place as the Swiss Army knife of the jobsite.











V | VERTICAL LIFT DESIGN

A vertical lift loader arm design delivers superior reach and lift height, keeping loads stable throughout the lift path. It improves truck loading, pallet handling, and material retention, while increasing efficiency, confidence, and productivity on demanding compact track loader jobsites.

| HIGH FLOW HYDRAULICS

High flow auxiliary hydraulics up to 31 GPM give a compact track loader the power to run demanding attachments like mulchers and planers. Increased flow maintains torque under load, improves attachment performance, and allows operators to take on higher-demand applications with confidence.

| COMPONENTS YOU TRUST

The loader is powered by a Yanmar 4TNV98CT diesel engine (73 hp) paired with Rexroth hydraulics and HUSCO valves (206 lbf-ft torque). These proven components deliver a long service life and SANY backs each with a standard 3 year/3,000-hour warranty.

| BREAKOUT FORCE & TIPPING LOADS

The ST230V's vertical lift geometry produces 5,733 lbf of breakout force with a 2,579 lbs rated operating capacity, giving you the muscle to push through tough materials and load efficiently. A tipping load of 7,368 lbs ensures you move more material with every lift.

| LOADED WITH FEATURES

Auto two speed travel and wide Z-pattern tracks improve traction, stability, and efficiency. High-flow hydraulics power demanding attachments, while a reversing fan aids cooling. A hydraulic quick coupler speeds attachment changes, and rear-view cameras enhance visibility, safety, and jobsite awareness.

A MACHINE **THAT'S EASY TO OWN**

Designed with ownership simplicity in mind, the ST230V delivers capability without unnecessary complexity. Auto two-speed travel and wide Z-pattern tracks provide stable, predictable performance across varied jobsites. High-flow auxiliary hydraulics up to 31 GPM support demanding attachments, while a hydraulic quick coupler makes attachment changes fast and straightforward. A reversing fan aids cooling and reduces debris buildup, helping minimize maintenance downtime. Rear-view cameras improve visibility and jobsite awareness, supporting safer daily operation. Proven components, efficient power delivery, and factory-backed warranties contribute to long-term reliability and lower operating costs. Together, these features create a compact track loader that's intuitive to operate, easy to maintain, and cost-effective to own over its entire life.

RELIABLE FROM THE INSIDE OUT

Working long hours, protecting your crew, and keeping revenue flowing all depend on equipment you can trust. The ST230V is engineered for long-term reliability, built to withstand thousands of operating hours in demanding conditions. Its robust structure manages continuous pushing and lifting forces, while the hydraulic system delivers consistent pressure and output. A proven powertrain is designed for sustained operation, keeping systems running smoothly shift after shift. Every design decision focuses on reducing downtime and maintaining uptime, which is why the ST230V is backed by a 3-year / 3,000-hour standard warranty—reliability that keeps your operation on schedule.



STRUCTURAL INTEGRITY

SANY doesn't cut corners on steel. The ST230V's heavy duty frame and reinforced lift arms are built for high tipping loads and rough terrain. Robotic welding and CNC cutting ensure precise fits, while strict quality checks confirm every weld before the loader reaches your jobsite. The robust architecture delivers a tipping load of 7,368 lbs that lets you load and lift with confidence.

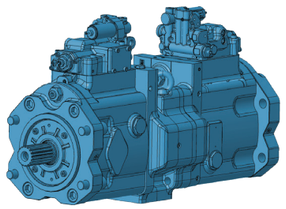

HYDRAULIC SYSTEM

The ST230V uses pilot-controlled, load-sensing hydraulics with high system pressure to deliver fast cycle times and smooth, predictable control. Adjustable controls allow operators to fine-tune hydraulic speed and sensitivity. Standard-flow and high-flow auxiliary hydraulics, with high flow up to 31 GPM, expand attachment versatility, supporting buckets, augers, trenchers, and other demanding tools with consistent performance.

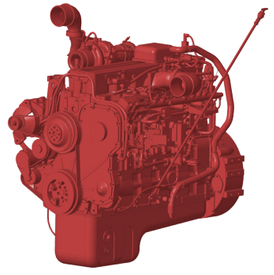

POWERTRAIN BY YANMAR

Under the hood, a Yanmar 4TNV98CT diesel engine delivers 73 hp of dependable net power while meeting current EPA and EU emissions standards. Designed for efficiency and durability, it provides consistent torque, smooth operation, and dependable performance, supported by proven engineering, effective cooling management, and long service intervals that help reduce operating costs over the machine's working life.

73

HORSE POWER

Net power
YANMAR 4TNV98CT diesel engine

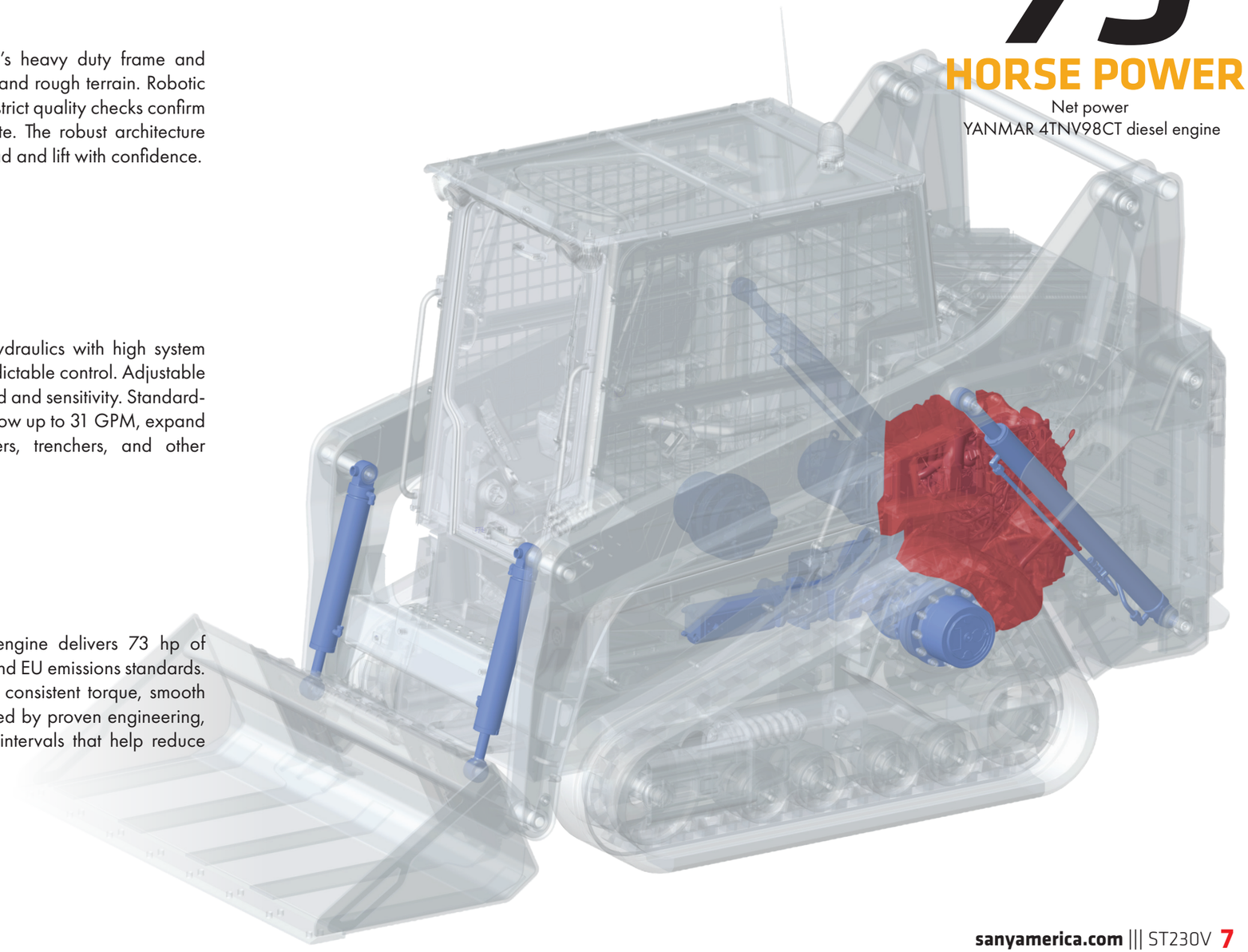

14+ FEATURES

specifically designed for operator and jobsite safety.



SAFETY PRIORITIZED

The loader's cab is ROPS/FOPS certified and each component is designed with operator safety first. Standard equipment includes seatbelt, emergency shut off, plus display alerts to enhance awareness. The 7" LCD display gives the operator a clear view of metrics, while LED lights and rear door design improve visibility in poor conditions. Secure handrails, tilt cab and anti-slip surfaces help operators maintain footing during inspection and servicing.

ST230V

COMPACT TRACK LOADER

10,318 LBS OPERATING WEIGHT
73 HP NET ENGINE POWER
7,368 LBS TIPPING LOAD

TECHNICAL SPECIFICATIONS

ENGINE	
Engine Model	Yanmar 4TNV98CT
Non-Road Emission Standard	Tier 4 Final / Stage V
Cylinders	4
Displacement	–
Rated Engine Power	73 hp
Peak Torque	206 lbf-ft @ 1,560 rpm

OPERATING	
Rated Operating Capacity	2,579 lbs
Tipping Load	7,368 lbs
Operating Weight	10,318 lbs
Max. Breakout Force	5,733 lbf
Lift Geometry	Vertical Lift
One Speed	5.4 mph
Two Speed	8.5 mph
Rubber Track Size	12.6", 15.75" (each in two patterns)
Standard Flow	21 gpm
High Flow	31.6 gpm
Cab	FOPS I & ROPS

*Operating weight is for the ST230V with no attachments, and standard stick.

SANY America Inc. reserves the right to change these specifications at any time without prior notification. ©2026 SANY America Inc. HEXPS26ST230V001

COMPACT TRACK LOADER ST230V

STANDARD FEATURES

ENGINE
Tier 4 final/stage V certified
One-click startup
Power mode
Cold start aid
Dual element air filter

POWERTRAIN
Two-speed hydrostatic
Rubber tracks (320mm/400mm)
Anti-derailment rollers
Service brake: hydrostatic
Parking brake: mechanical

HYDRAULIC
Pilot control system
Load-sensing system
Joystick controls
High-flow auxiliary
Hydraulic quick coupler ready
Bucket leveling

CABIN
ROPS/FOPS certification
Sun Visor
Air-suspension seat (cloth)
Seat belt, retractable
Armrest
7’ Touchscreen display
Auto air condtioner / Heat

ELECTRICAL
Battery disconnect switch
12V system
AM/FM Bluetooth radio
Back up alarm
Cab mounted LED work lights

OTHER
Tracks: Rubber, two patterns
Rear door dual-layer
Cab > 60°
Drawbar hitch

In the interest of continual equipment development, SANY America Inc. reserves the right to change these specifications at any time without prior notification.
©2026 SANY America Inc. HEXPS26ST230V001

10,318 LBS OPERATING WEIGHT
73 HP NET ENGINE POWER
7,368 LBS TIPPING LOAD

OEM ATTACHMENTS

72” Standard Duty Low Pro Bucket w/BOE
72” Standard Duty Low Pro Bucket w/BOT
72” Low Pro Dirt Bucket w/ BOE & Side Cutters
72” Low Pro Dirt Bucket w/ Teeth & Side Cutters
78” Multi-Purpose Bucket w/ BOE & Side Cutters
78” Multi-Purpose Bucket w/ Teeth & Side Cutters
72” Skeleton Grapple
72” Scrap Grapple w/ BOE
Auger Drive–2” Hex 15–25 GPM
72” Pick Up Broom w/ Combo Wafers
84” Angle Broom w/ Hyd Angle & Electrical Plug
90” Power Rake w/ Hyd Angle & Electrical Plug
72” Open Front Brush Cutter 25–33 GPM, 6” Capacity
72” Closed Front Brush Cutter 25–33 GPM, 4” Capacity
96” Snow/Light Material Bucket w/ BOE
72” Snow Blower 33–42 GPM w/ Electrical Plug
48” Trencher 25-33 GPM w/ 6” Terminator Plug
60” Trencher 25–33 GPM w/ 6” Rock & Frost Chain
5,500 lbs Rail Pallet Fork–Hi-Vis 1 1/2” x 48” Tines

In the interest of continual equipment development, SANY America Inc. reserves the right to change these specifications at any time without prior notification.
©2026 SANY America Inc. HEXPS26ST230V001

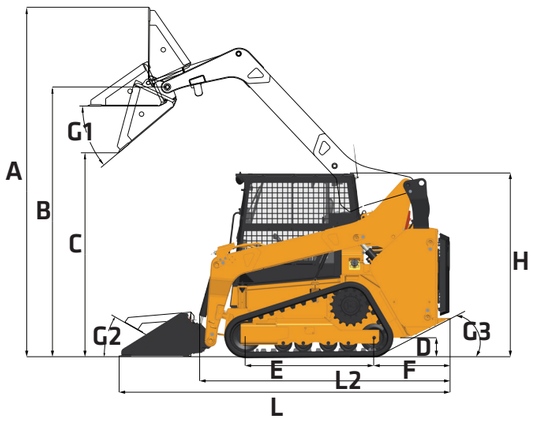

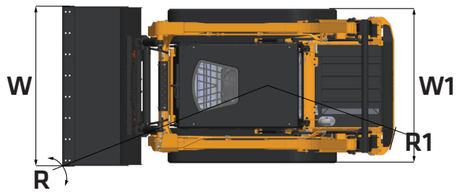

DIMENSIONS

A	Maximum Overall Height	156”
B	Bucket Pin Height at Maximum Lift	120.5”
C	Clearance at Maximum Lift and Dump	92”
D	Ground Clearance	9”
E	Track Length on Ground	57.5”
F	Bumper Overhang Behind Rear Axle	34.8”
G1	Maximum Dump Angle	40°
G2	Rollback Angle of Bucket on Ground	30°
G3	Departure Angle	28°
H	Height of Top of Cab	82.7”
L	Length with Bucket on Ground	142.1”
L1	Reach at Maximum Lift and Dump	42”
L2	Length without Bucket	113.6”
R	Turning Radius from Center-Bucket	82.7”
R1	Turning Radius From Center-Machine Rear	66.3”
W	Width with Bucket	72”
W1	Width without Bucket	70”

In the interest of continual equipment development, SANY America Inc. reserves the right to change these specifications at any time without prior notification. ©2026 SANY America Inc. HEXPS26ST230V001

INDUSTRY’S STRONGEST STANDARD WARRANTY | 3-YEAR* 3,000 HOURS

*WARRANTY APPLIES TO 2026 TELEHANDLER, GRADER, ROLLER, TRACK LOADER AND CRANE MODELS ONLY.

SANY America Inc. 318 SANY Way
Peachtree City, Georgia 30269
470.552.SANY sanyamerica.com

CONNECTED, **INFORMED**, IN CONTROL
TECHNOLOGY

CONNECTED EVI TELEMATICS

EVI is SANY’s proprietary telematics platform and is available through your local dealer. This platform allows you to geofence your machine, monitor fuel levels, track run time hours and error codes, and schedule maintenance remotely. Accessible via your local dealer, SANY EVI keeps owners connected to their equipment and helps maximize uptime.

ATTACHMENT-READY SYSTEM

The ST230V features a standard pin connector that enables control of multifunction attachments directly from the OEM joysticks. A factory hydraulic quick coupler and high-flow auxiliary support simplify attachment setup and changeovers, allowing quick configuration and easy adaptation to different jobsite tasks.

SMART DISPLAY AND CONTROLS

A 7” LCD display replaces the traditional dash and serves as the operator’s hub. It shows key metrics (fuel level, hydraulic temperatures and pressures), and allows quick adjustment of settings. Operators can monitor performance, choose modes, and manage attachments all through the touchscreen interface and intuitive controls.



DO EVERYTHING

Perform hundreds of tasks and view important data all through one display.

10
POINTS
of seat adjustability

DESIGNED FOR **COMFORT**
ALL SHIFT LONG

This spacious cab is built for comfort and intuitiveness with safety and ergonomics at the core. The adjustable seat allows each operator to achieve their ideal position, plus the air-suspension functions for all-day comfort. The ST230V's LCD display places common gauges and adjustments within easy reach. The enclosed cab is equipped with a standard heating and air-conditioning system to maintain optimal comfort regardless of external conditions. In addition, Bluetooth connectivity allows for reliable hands-free communication. Large cabin glass panels and rear door maximize visibility of the work area, helping operators stay confident and productive throughout the shift.

BUILT **AROUND THE**
OPERATOR

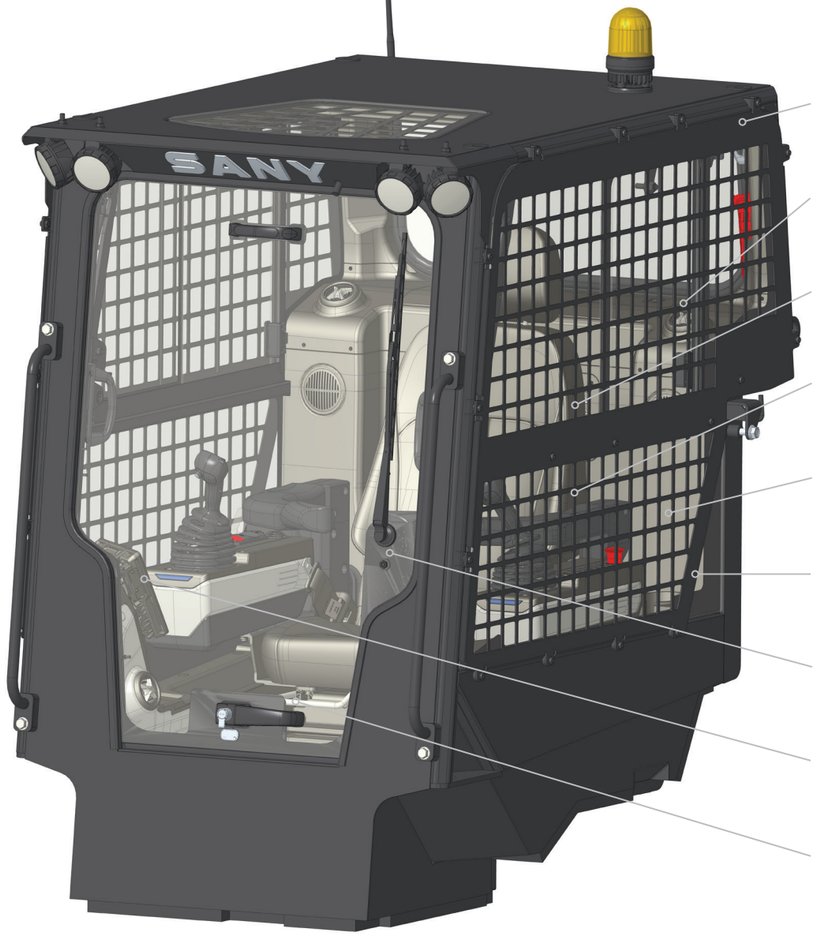

CUSTOM OPERATOR ERGONOMICS

A comfortable operator is a productive operator, and this cab is designed around the operator. An air suspension seat absorbs vibration and adjusts to fit operators of all sizes. Pilot controls reduce hand movement. Climate control and connectivity keep the cab comfortable and connected during long shifts. One-click start and unlock keep you connected and minimize clutter during long shifts.

OPTIMAL JOBSITE AWARENESS

Large glass panels provide an unobstructed view to the bucket and surrounding area. The LCD display allows operators to check their surroundings at a glance. LED lights improve visibility during early morning starts or dusty conditions. Together, these features help operators work safely and confidently throughout the day.

INTENTIONALLY **ENGINEERED** FOR SERVICE

UPTIME IS OUR PRIORITY

With fast diagnostics, streamlined repairs and software tools for remote support it's easy to keep your SANY excavator running strong. Our local dealer network, stretching across North America, provides quick response and maximizes your productivity.

DEDICATED TO SUPPORT

We're expanding our U.S. footprint with local engineering, quality assurance and service teams—backed by a multi-year investment in support, training, and parts.

EASE OF ACCESS

Its spacious compartments offer ample room for tools, filters, and components, ensuring efficient inspections and replacements that minimize downtime on the job site.

FAST DAILY PRE-CHECKS

Machines are designed so operators can safely and easily inspect critical systems—mostly from the ground—for quick visual and manual checks.

PARTS ON THE SHELF READY TO SHIP

We continually expand parts inventory across our major North American distribution centers and improve forecasting to keep high-demand components in stock. This longterm strategy ensures critical parts are ready to ship when they're needed most.











#1 *FASTEST* GROWING

support network in North America.



WE'VE GOT YOUR BACK

At SANY, we see every customer as a relationship whose success is directly tied to ours. We focus on keeping you productive, because when your machines are running, your business is winning. Our warranty support, faster claim approvals, not just our equipment. Your feedback fuels continuous improvement—real updates to software, hydraulics, and performance through close collaboration with key suppliers. With expanding U.S. support, trained technicians, ongoing investments, and stronger parts availability, we stay by your side so your business can keep moving forward.



CUSTOMERS FIRST ALWAYS

At SANY America, everything begins with you. We design machines that make your work safer, more efficient, and more profitable—and we stand behind them with U.S.-based support you can count on. From ergonomic cabs and superior visibility to quick daily checks and dependable uptime, every feature is engineered around real operator needs and real jobsite demands. Your feedback directly drives our product improvements, accelerating software updates, hydraulic refinements, and long-term durability enhancements. With expanding American facilities, local engineering and service teams, certified technicians, and three parts distribution centers nationwide, we operate as your committed business partner—focused on your success today and every day ahead.

INDUSTRY'S **STRONGEST** STANDARD WARRANTY

SANY America delivers the most comprehensive standard warranty in the industry—protecting your investment from day one.

- **3 years / 3,000 hours of full machine coverage included with every Compact Track Loader**
- **Lower total operating risk and fewer unexpected costs over machine life**
- **Confidence in long-term durability backed by factory engineering and testing**
- **Stronger coverage than leading OEM competitors – standard, not add-on**

Choosing SANY means choosing equipment built to work—and a partner committed to standing behind your success.

FINANCING THAT WORKS AS HARD AS YOU DO

Smart financing that makes owning SANY equipment faster, easier, and affordable.

- **Quick approvals – many customers approved in under 5 minutes**
- **Simple mobile app for secure document signing and easy payment management**
- **Flexible terms and competitive promotions, including 0% for 60 months**
- **Faster approvals for repeat customers to keep your fleet growing**
- **Top-rated experience with a 4.95 out of 5 Trustpilot score**

Financing with SANY is built to support your business growth every step of the way.

TOTAL COST OF OWNERSHIP

SANY machines are engineered to deliver a stronger return on investment by lowering the true cost of ownership over the life of your equipment.

- **Fuel-efficient performance reduces operating costs every hour the machine runs**
- **Extended service intervals minimize downtime and maintenance expense**
- **Parts cost management keeps replacement and wear items affordable**
- **High resale value helps protect your investment over time**
- **More standard features from the factory reduce the need for costly add-ons**

Every detail is designed to help you earn more, spend less, and get maximum value from every machine you own.



SANY America Inc.
318 SANY Way
Peachtree City | GA 30269
T | 470-552-SANY

BRHEX26ST230V001

sanyamerica.com

In the interest of continual equipment development, SANY America Inc. reserves the right to change these specifications at any time without prior notification.

© 2026 SANY America Inc.